MIG/MMA/TIG INVERTER WELDER WITH LED SCREEN 160A/180A/200A

MODEL NO: **IMIG160.V3, IMIG180.V4, INVMIG200.V5**

Thank you for purchasing a Sealey product. Manufactured to a high standard, this product will, if used according to these instructions, and properly maintained, give you years of trouble free performance.

IMPORTANT: PLEASE READ THESE INSTRUCTIONS CAREFULLY. NOTE THE SAFE OPERATIONAL REQUIREMENTS, WARNINGS & CAUTIONS. USE THE PRODUCT CORRECTLY AND WITH CARE FOR THE PURPOSE FOR WHICH IT IS INTENDED. FAILURE TO DO SO MAY CAUSE DAMAGE AND/OR PERSONAL INJURY AND WILL INVALIDATE THE WARRANTY. KEEP THESE INSTRUCTIONS SAFE FOR FUTURE USE.

Refer to instruction manual

Wear a welding mask

Wear protective gloves

Wear safety footwear

Wear protective clothing

Warning! Electric shock hazard

Warning! Hot surface

DO NOT use in vicinity of pacemaker

Arc rays can burn eyes and injure skin

Warning! Keep away from rain

Caution! Welding fumes

Welding sparks can cause explosions or fire

1. SAFETY

1.1. ELECTRICAL SAFETY

❑ **WARNING!** It is the user's responsibility to check the following:
✓ Check all electrical equipment and appliances to ensure that they are safe before using.
✓ Inspect power supply leads, plugs and all electrical connections for wear and damage.
✓ Ensure that the insulation on all cables and on the appliance is safe before connecting it to the power supply.
× **DO NOT** use worn or damaged cables, plugs or connectors.
✓ Ensure that any faulty item is repaired or replaced immediately by a Sealey qualified technician.
✓ If the cable or plug is damaged during use, switch off the electricity supply and remove from use.
✓ Sealey recommend that an RCD (Residual Current Device) is used with all electrical products.
IMPORTANT: Ensure that the voltage rating on the appliance suits the power supply.
× **DO NOT** pull or carry the appliance by the power cable.
× **DO NOT** pull the plug from the socket by the cable.
❑ **WARNING!** Unplug the welder from the mains power supply before performing maintenance or service.
❑ **WARNING!** Risk of electric shock: Electric shock from welding electrode can kill. **DO NOT** weld in the rain or snow. Wear dry insulating gloves. **DO NOT** touch electrode with bare hands. **DO NOT** wear wet or damaged gloves. Protect yourself from electric shock by insulating yourself from work piece. **DO NOT** open the equipment enclosure.
✓ This unit must be connected to a suitable supply by qualified personnel in accordance with relevant national and local regulations

1.2. GENERAL SAFETY

✓ Keep children and bystanders away from the work area.
✓ Keep work area clean and well lit. Cluttered or dark areas invite accidents.
✓ Stay alert, watch what you are doing and use common sense when operating the welder.
× **DO NOT** use the welder whilst you are tired or under the influence of drugs, alcohol, or medication.
✓ Store the welder and accessories in a dry, secure location, away from children.

1.3. USE OF PROTECTIVE ACCESSORIES

The arc and its reflecting radiation damage unprotected eyes. Always protect your eyes and face with an appropriate welding mask. The arc and welding spatters burn unprotected skin. Sparks and hot metal can also burn. When welding, always use dry, insulating, protective gloves, footwear and clothing.

1.4. SAFE USE OF THE WELDING GUN

Parts of the machine, such as the end of the filler wire and welding gun become burning hot during use. The wire is also sharp and moves quickly, so be careful when threading it into place. **NEVER** carry the machine on your shoulder during welding, but place it on an even surface. **DO NOT** keep the machine near or on hot objects, as the plastic cover may melt. **DO NOT** move the shielding gas bottle when the control valve is in place. Fix the gas bottle securely in an upright position to a separate wall rack or bottle cart. Always close the gas bottle after use.

1.5. FIRE SAFETY

Welding is always classified as hot work, so pay attention to fire safety regulations. Protect the environment from welding spatters. Remove inflammable material, such as burning fluids, from the vicinity of the welding site and supply the site with adequate firefighting equipment. Take into account dangers caused by special workplaces, such as fire risk and danger of explosion, when welding container-like pieces. **NOTE:** Fire caused by sparks may break out even after several hours.

❑ **WARNING!** Welding in inflammable and explosive atmospheres is strictly forbidden!

1.6. SUPPLY VOLTAGE

DO NOT take the welding machine inside a work piece, for example into a container or a car. **DO NOT** place the welding machine on a wet surface. Change faulty cables immediately as they are potentially life-threatening and may cause a fire. Ensure that cables are not squeezed or in contact with sharp edges.

1.7. WELDING CIRCUIT

Insulate yourself from the welding circuit by using dry and undamaged protective clothing. **DO NOT** work on a wet surface. **DO NOT** use damaged welding cables. **DO NOT** place the welding gun or earthing clamp on the welding machine or other electrical device.

1.8. WELDING FUMES

Make sure ventilation is sufficient. Take special precautions when welding metals containing lead, cadmium, zinc, mercury or beryllium. Supply of sufficient clean air can also be ensured with the use of a fresh air mask.

1.9. MACHINE USE

If you use filler wire, make sure that the feed roll groove, welding gun contact tip and machine polarity are suited for the fitted wire size and type.

1.10. BEFORE IMPLEMENTATION

The products are packed to durable packages especially designed for them. However, always make sure before use that products have not been damaged during transportation. Also check that you have received the products you ordered and the instruction manuals needed.

1.11. TRANSPORTATION

The machine should be transported in an upright position. **NOTE:** Always move the welding machine by lifting it from the handle. **NEVER** pull it from the welding gun or other cables. Gas bottles should be disconnected before transportation. Follow correct manual handling practice at all times.

1.12. ENVIRONMENT

The machine is suitable for both indoor and outdoor use, but it should be protected from snow, heavy rain and sunshine. Extra caution must be taken if working from an elevated position. Store the machine in a dry and clean environment and protect it from sand and dust during use and storage. The recommended operating temperature range is -20°C to +40°C. Place the machine in such a way that it does not come in contact with hot surfaces, sparks and spatters. Make sure the air flow in the machine is unrestricted.

1.13. MAINS SUPPLY

Welding equipment should be connected to the mains supply according to the manufacturer's recommendations. If interference occurs, it may be necessary to take additional precautions such as filtering of the main supply. Consideration should be given to shielding the supply cable of permanently installed welding equipment in metallic conduit or equivalent. Shielding should be electrically continuous throughout its length. The shielding should be connected to the welding power source so that good electrical contact is maintained between the conduit and the welding power source enclosure.

1.14. WELDING CABLES

The welding cables should be kept as short as possible and should be positioned close together, running at or close to the floor level.

1.15. EARTHING OF THE WORK PIECE

Where the work piece is not bonded to earth for electrical safety, nor connected to earth because of its size and position, e.g. ship's hull or building steel work, a connection bonding the work piece to earth may reduce emissions in some but not all instances. Care should be taken to prevent the earthing of the work piece increasing the risk of injury to users, or damage to other electrical equipment. Where necessary, the connection of the work piece to earth should be made by direct connection to the work piece. But in some countries where direct connection is not permitted, the bonding should be achieved by suitable capacitance selected according to national regulations.

1.16. THERMAL PROTECTION

Should the welder become overheated due to prolonged use, beyond the stated duty cycle, the thermal protection will cause the welder to cut out. Wait for the welder to cool down at which time it will reconnect automatically.

1.17. GAS BOTTLE AND WIRE FEEDER SAFETY

Wire feeder safety involves preventing electrical shock, fire, and injury by using proper PPE, securing shielding gas cylinders upright, and ensuring proper grounding. Key operational precautions include using appropriate drive roll tension to avoid "bird nesting," replacing worn liners to prevent erratic feeding, and storing wire in dry conditions to avoid rust.

❑ **WARNING! DO NOT** use a welding power source to thaw pipes.

❑ **WARNING! DO NOT** place the welding power source on a tilted plane as this may lead to the unit toppling over.

2. INTRODUCTION

Supports MIG, MMA and TIG welding for broad professional workshop use. Welds steel, copper, nickel, titanium and their alloys. Gas and Gasless operating with solid or flux cored wire for varied workshop environments. Suitable for rutile, basic, and stainless electrodes from Ø1.6mm to Ø4mm. Fan cooled DC power supply ensures dependable operation. Thermal overload protection safeguards internal components. LED screen provides easy visibility of welding settings. Accepts 5kg wire spools for longer uninterrupted welding sessions. Supplied with 3m MIG torch, 2m 16mm² earth cable, 3m gas hose and quick connectors.

3. SPECIFICATION

Model No	IMIG160.V3	IMIG180.V4	INVMIG200.V5
Electrical Class	Class 1	Class 1	Class 1
Nett Weight	8.5kg	9.0kg	9.6kg
Power Supply Cable Length	2m	2m	2m
Welding Current	20-160A - MMA/TIG 30-160A - MIG	20-180A - MMA/TIG 30-180A - MIG	20-200A - MMA/TIG 30-200A - MIG
Duty Cycle MIG	100% @ 72A, 60% @ 93A, 20% @ 160A	100% @ 70A, 60% @ 90A, 15% @ 180A	100% @ 78A, 60% @ 100A, 15% @ 200A.
Duty Cycle TIG	100% @ 72A, 60% @ 93A, 20% @ 160A	100% @ 70A, 60% @ 90A, 15% @ 180A	100% @ 78A, 60% @ 100A, 15% @ 200A.
Duty Cycle MMA	100% @ 72A, 60% @ 93A, 20% @ 160A	100% @ 70A, 60% @ 90A, 15% @ 180A	100% @ 78A, 60% @ 100A, 15% @ 200A.
Wire Capacity	5kg	5kg	5kg
Electrode Capacity	Ø1.6 up to Ø4mm	Ø1.6 up to Ø4mm	Ø1.6 up to Ø4mm
Absorbed Power	7.56kW	8.23kW	8.74kW
Gas Type	CO2, Argon, CO2/Argon Mix	CO2, Argon, CO2/Argon Mix	CO2, Argon, CO2/Argon Mix
Supply	230V	230V	230V
Plug Type	Bare Wire	Bare Wire	Bare Wire
IP Rating	IP21S	IP21S	IP21S
Insulation Class	F	F	F
EMC Classification	Class A	Class A	Class A
Static Characteristic	Flat	Flat	Flat
Pollution Degree	3	3	3
Efficiency of the Product	85%	85%	85%

4. CONTENTS

fig.1

1	Main Unit
2	MIG Torch
3	Ground/Earth Clamp
4	Electrode Holder
5	3m Gas Hose 16mm² + jubilee clips (not shown)

5. FEATURES

fig.2

1	Control Panel
2	MIG Connection
3	Polarity Conversion Cable
4	Positive/+ Workpiece/Torch Polarity
5	Negative/- Workpiece/Torch Polarity
6	On/Off Switch
7	Mains Cable
8	Gas Connection
9	Side Panel Latch

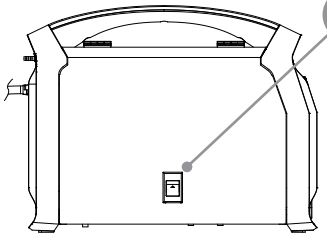

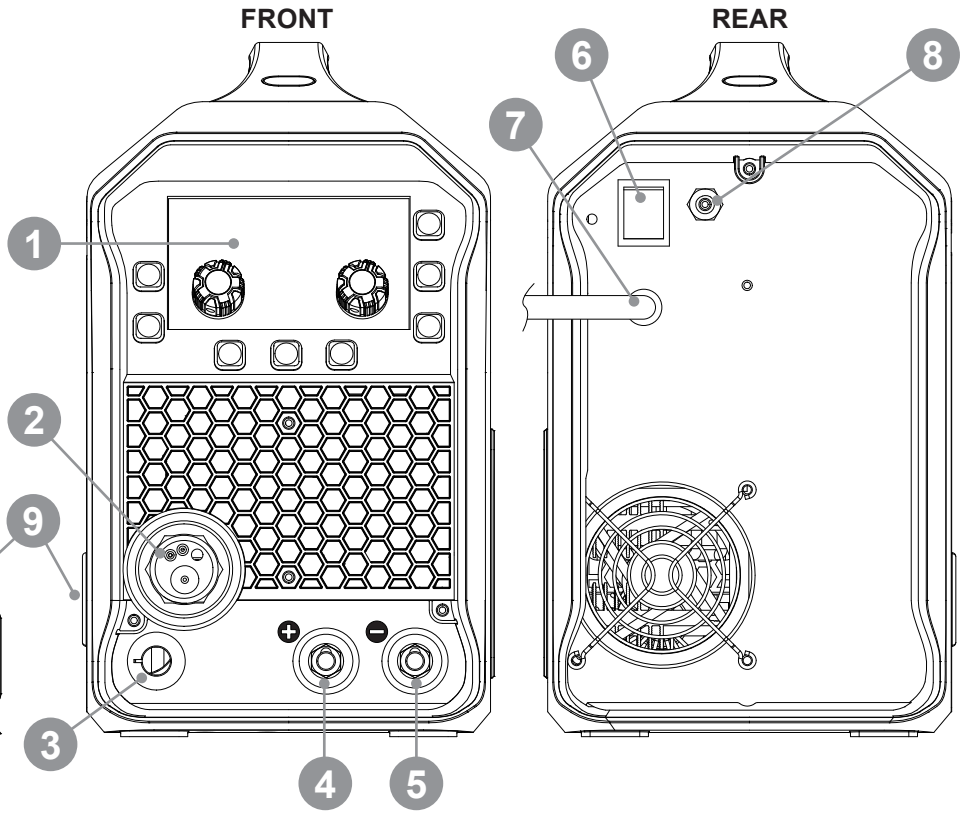

6. ASSEMBLY

❑ **WARNING!** Unplug the welder from the mains power supply before performing the following procedure.

6.1. FITTING A REEL OF WIRE (fig.3)

NOTE: Wire only required for MIG/MAG modes

6.1.1. Open side door (fig.2.9).
6.1.2. Undo spindle knob (fig.3.1) by pushing against the spring and turning anti-clockwise.
6.1.3. Remove reel holder.
6.1.4. Load reel onto spindle so that the wire will feed from bottom of the reel as shown and refit reel holder and secure with spindle knob.
6.1.5. Release pressure roller by flipping the wire tension knob (fig.4.1) towards you which will release the spring-loaded pressure roller.
6.1.6. Select correct wire feed roller for wire size as follows:
Unscrew the feed roller knob anti-clockwise (fig.4.2).
Check orientation of wire feed roller by seeing which size marking is visible (fig.4.3)
Example: If the wheel shows '1.0' that means the wheel is orientated to use 0.8 mm wire.
To use 1.0mm wire, remove the wheel from the spindle, turn it around and fit it so that '0.8' is visible.
6.1.7. Straighten end of wire and gently push into wire guide.
6.1.8. Close pressure roller (fig.4.4).
6.1.9. See 6.3 for setting wire tension.
6.1.10. Select wire diameter on the main display (fig.7.3).

fig.3

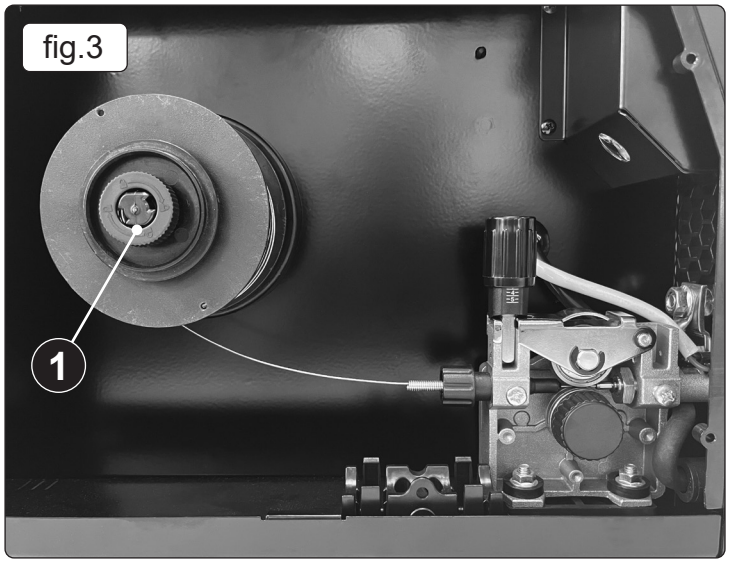

fig.4

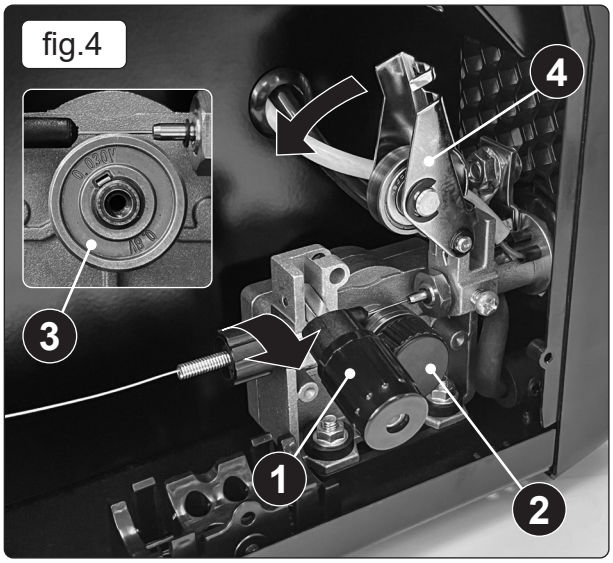

6.2. FEED THE WIRE THROUGH TO THE TORCH (fig.5)

6.2.1. Remove end cup (fig.5.A)) and contact tip (fig.5.B) from end of torch as follows:

a) Take torch in left hand with the torch tip facing to the right.

b) Grasp end cup firmly in your right hand.

c) Turn end cup clockwise only and pull cup off.

❑ **WARNING! DO NOT** turn end cup anti-clockwise, as this will damage the internal spring.

d) Unscrew the copper contact tip (fig.5.B) (right-hand thread) to remove.

6.2.2. Check welder is switched OFF and that the ground clamp is away from the torch tip. Connect the welder to the mains power supply, turn the unit on using the On/Off Switch (fig.2.6). Select the MIG function by pressing the Mode Select button (fig.7.5) until 'MIG' is displayed.

6.2.3. Set the voltage by pressing Encoder 2 (fig.7.10) until 'V' for voltage is displayed and turn the encoder anti-clockwise to set the minimum voltage.

6.2.4. Keeping the torch cable as straight as possible, press and hold the Wire Feed button (fig.7.6). The wire will feed through the torch.

6.2.5. When wire has fed through, switch welder off, unplug from mains.

a) Take torch in left hand, slide the contact tip over the wire and screw it back into place.

b) Grasp end cup in right hand, push onto torch head and turn clockwise only.

❑ **WARNING! DO NOT** turn gas cup anti-clockwise, as this will damage the internal spring.

c) Cut wire so that it is just protruding from the cup.

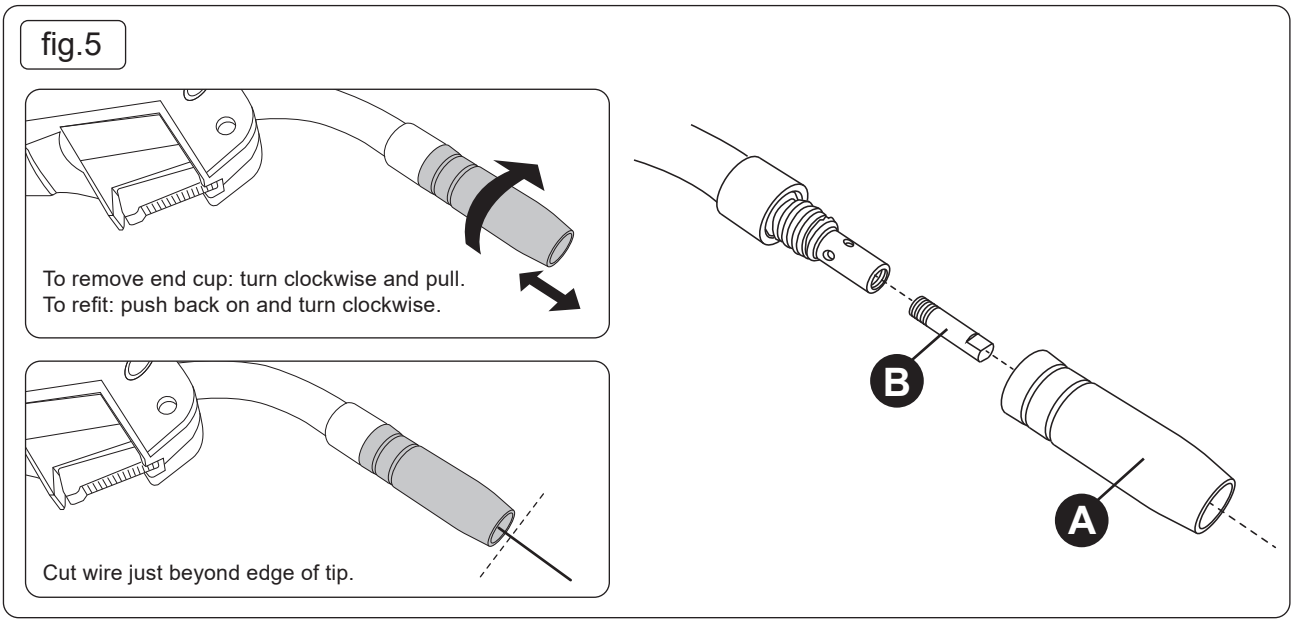

6.3. SETTING WIRE TENSION

You must set the correct tension, too little or too much tension will cause problematic wire feed and result in a poor weld. Correct tension between the rollers is checked by slowing down the wire between gloved fingers. If the pressure roller skids the tension is correct. Try to use the lowest tension possible as too high a tension will deform the wire. Adjust the tension by rotating the wire tension knob (fig.6.1) clockwise for more tension and anti-clockwise for less. The knob has a marked gauge for guidance.

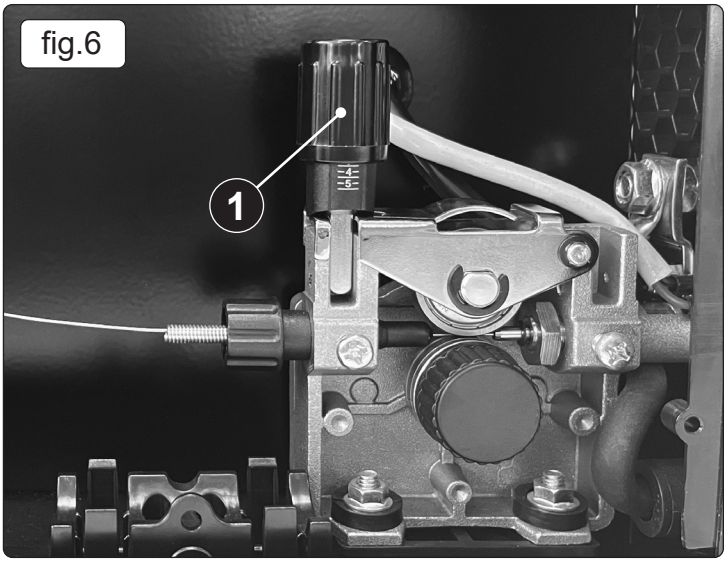

7. DISPLAY PANEL

fig.7

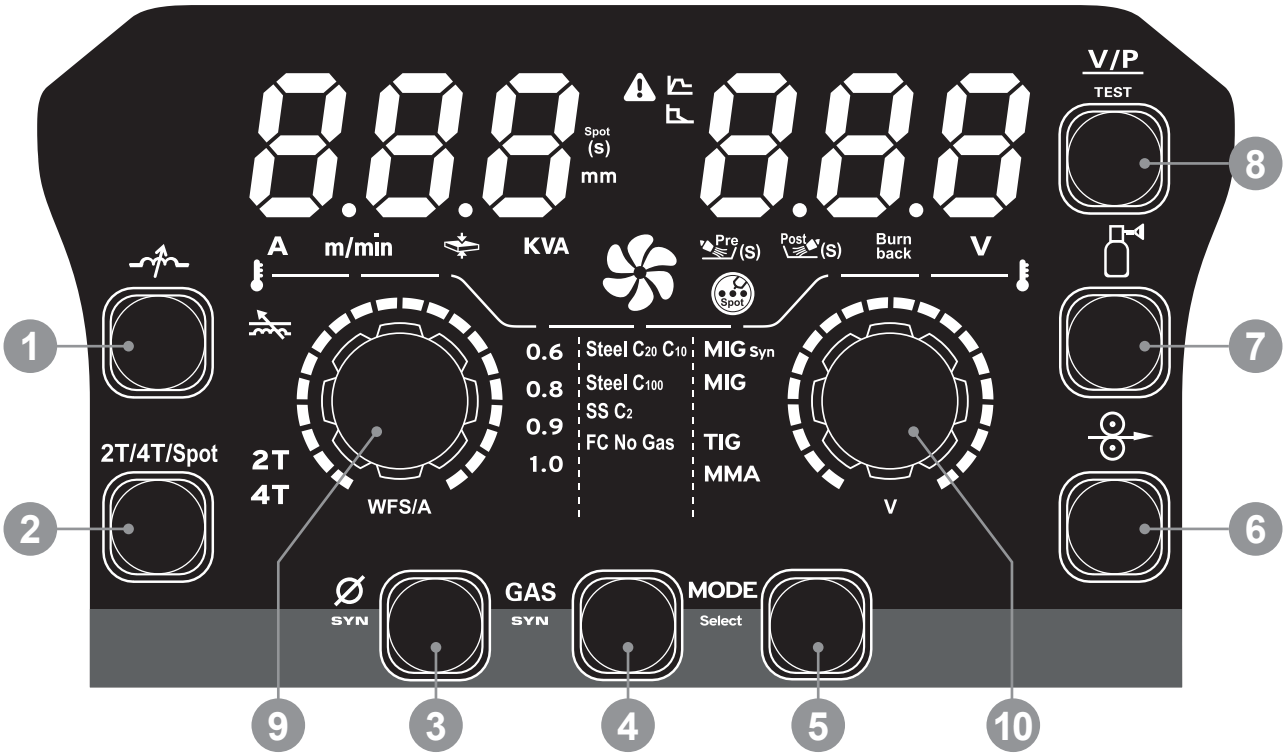

No.	Name	Effect
1	Inductance	-10 to 10 (Arc soft to hard)
2	2T/4T/Spot	2T/4T works for MIG mode Spot for MIG mode
3	Wire Size Selection	Works when MIG SYN mode is selected
4	Gas/Material Selection	Works when MIG SYN mode is selected
5	Mode Selection	MIG SYN, MIG, TIG, MMA modes
6	Wire Feed	Press for wire feeding
7	Gas Check	Press to check gas
8	V/P test	Press and the input voltage will be shown
9	Control Dial 1	Current adjustment when in MMA and TIG modes. WFS and plate thickness adjustment when in MIG SYN and MIG modes. Adjusts working time when in SPOT MIG mode
10	Control Dial 2	When in MIG and MIG SYN modes: Short press the control dial and the Burn Back function and Voltage can be adjusted. In MMA mode: Short press the control dial and the Arc Force and Hot Start functions can be selected - turn the dial to set the value.

SYMBOL IDENTIFICATION

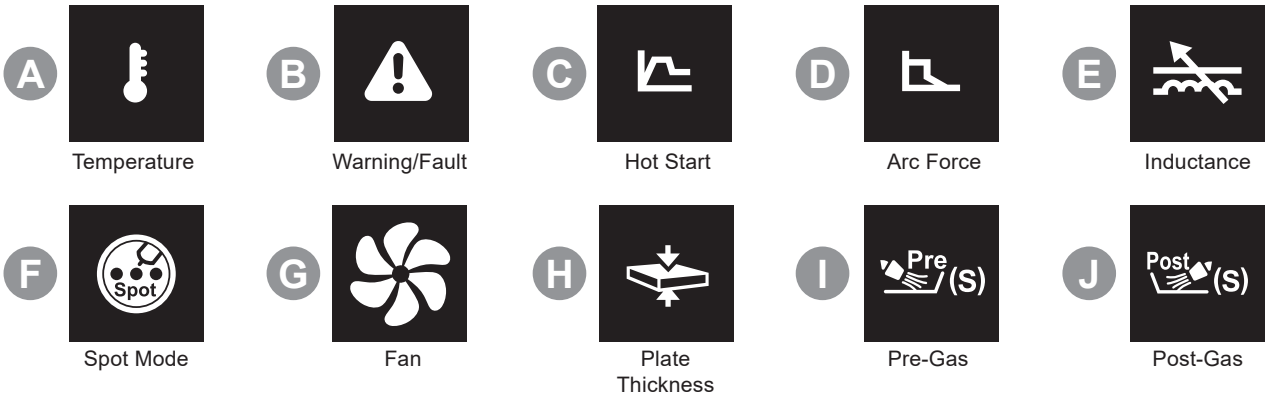

8. PREPARATION

8.1. RECOMMENDED SET-UP PROCEDURE

NOTE: See Operation section for connection set-up for specific modes.

8.1.1. Make sure the machine is turned off.
8.1.2. Check the power cable for any damage and check that the input voltage is correct.
8.1.3. If required, select the appropriate gas and connect the gas.
8.1.4. If MIG or MIG Syn modes are to be used, the wire feeder should be installed (see Section 6 Assembly).
8.1.5. The workpiece is firmly connected according to polarity.
8.1.6. Connect the welding torch according to polarity.
8.1.7. Turn on, select the correct welding mode on the screen, and adjust the appropriate parameters.
8.1.8. Before starting, ensure that no short circuit is formed between the torch and the workpiece.

8.2. CHOOSE THE RIGHT GAS

Mode	Material	Gas
MMA	Steel	Gas not required
TIG	Steel, Stainless Steel (DC TIG)	Pure Argon
MIG/MAG	Steel	20% CO_2 +80% argon or Pure CO2 25% CO_2 +75% argon 10% CO_2 +90% argon
	Stainless steel	2% CO_2 +98% argon or tri-mix gas 2% O_2 +98% argon
MIG FLUX CORE	Steel	No gas or pure CO_2

8.3. SHORT CIRCUIT PROTECTION

8.4. When a short circuit is detected, the machine will turn off the output current to avoid potential overload.
8.5. There may still be residual output current, so the user should avoid a potential short circuit between the electrode and the workpiece as much as possible.
8.6. If the short circuit protection is triggered, the machine should be switched off and disconnected from the power supply. The cause for the short circuit must be investigated and rectified before proceeding.

9. OPERATION

❑ **WARNING!** Ensure that the inverter is not plugged into the mains power supply before connecting or disconnecting cables. For electrical installation, see Safety Instructions (Section 1). Failure to follow the electrical safety instructions may affect the operating performance and could damage the built-in safety system which, in turn, could result in personal injury or fatality and will invalidate the warranty.

IMPORTANT: These instructions are not intended to teach you how to weld. If you have no experience, we recommend that you seek training from an expert source. Welding requires a steady hand and supervised practice on scrap metal, as it is only with continued practice that you will achieve the desired results.

9.1. MMA WELDING (fig.8)

9.1.1. Set up the welder as per fig.8.

9.1.2. Connect the power cable of the welding machine to a power outlet that meets the voltage requirements, ensuring proper grounding.

9.1.3. Connect the electrode holder cable (fig.1.4) to the positive (+) or negative (-) output terminal of the welding machine. The specific connection depends on the welding requirements.

9.1.4. Connect the ground clamp cable (fig.1.3) to the other output terminal of the welding machine. Ensure the ground clamp is securely attached to the workpiece.

9.1.5. Insert the welding electrode into the electrode holder, ensuring good contact.

9.1.6. Turn on the welder using the On/Off switch (fig.2.6).

9.1.7. Select the required functions using the buttons and dials on the control panel for MMA mode.

9.1.8. Press the Mode Selection Button (fig.7.5) until 'MMA' is displayed.

9.1.9. Adjust the current using Control Dial 1 (fig.7.9).

ARC FORCE

9.1.10. When the electrode is too close to the workpiece, the welder will increase the output current and the electrode will melt faster.

9.1.11. Arc Force helps prevent short circuits.

9.1.12. Select Arc Force by pressing Control Dial 2 (fig.7.10) until the Arc Force symbol is displayed (fig.7.D).

9.1.13. Adjust the value by rotating Control Dial 2 (fig.7.10).

HOT START

9.1.14. Hot arcing refers to increasing the output current during arcing, which will improve the success rate of arcing.

9.1.15. After successful arcing, the current is automatically turned off.

9.1.16. Select Hot Start by pressing Control Dial 2 (fig.7.10) until the Hot Start symbol is displayed (fig.7.C).

9.1.17. Adjust the value by rotating Control Dial 2 (fig.7.10).

fig.8 **MMA**

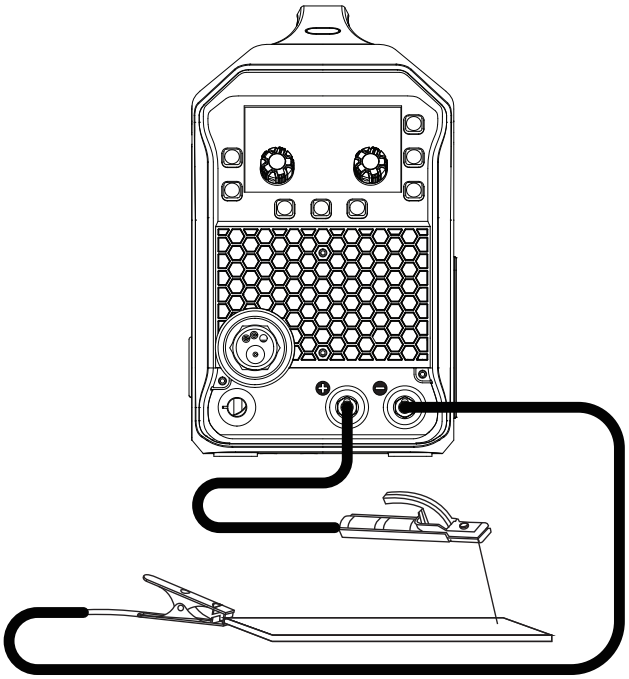

MMA Welding Parameters - relationship between plate thickness, electrode diameter and current.

Plate Thickness	Electrode Diameter	Current
<2mm	1.6mm Ø	25-40A
2mm	2mm Ø	40-60A
3mm	3.2mm Ø	100-130A
4-5mm	3.2mm Ø	100-130A
	4.0mm Ø	160-180A
6-12mm	4.0mm Ø	160-180A
	5.0mm Ø	200-270A
>13mm	4.0mm Ø	160-180A
	5.0mm Ø	200-270A
	6.0mm Ø	260-300A

9.2. TIG WELDING (fig.9)

9.2.1. Set up the welder as per fig.9.

9.2.2. Connect the power cable of the welding machine to a power outlet that meets the voltage requirements, ensuring proper grounding.

9.2.3. Connect the TIG torch (not included, sold separately) to the negative (-) output terminal of the welding machine.

9.2.4. Connect the ground clamp cable (fig.1.3) to the positive (+) output terminal of the welding machine. Ensure the ground clamp is securely attached to the workpiece.

9.2.5. Insert the welding electrode into the electrode holder, ensuring good contact.

9.2.6. Connect an Argon gas cylinder to the TIG torch hose.

9.2.7. Turn on the welder using the On/Off switch (fig.2.6).

9.2.8. Select the required functions using the buttons and dials on the control panel for TIG mode.

9.2.9. Press the Mode Selection Button (fig.7.5) until 'TIG' is displayed.

9.2.10. Adjust the current using Control Dial 1 (fig.7.9).

9.2.11. Pre-Gas and Post-Gas

9.2.12. Pre-gas is the flow of shielding gas that occurs before the arc is initiated. Post-gas is the flow of shielding gas that continues after the arc is extinguished.

9.2.13. Select either Pre-Gas (fig.7.I) or Post-Gas (fig.7.J) by pressing Control Dial 2 until the required symbol is displayed.

9.2.14. Rotate the control dial to adjust.

9.2.15. Open the valve of the argon cylinder. Adjust the volume of flow meter and make sure it is adequate for welding.

9.2.16. Turn on the flow switch on the TIG torch and adjust the argon flow from the torch as required.
NOTE: When welding is over, argon will still flow out for several seconds in order to protect the welding spot before it has cooled down.

fig.9 **TIG**

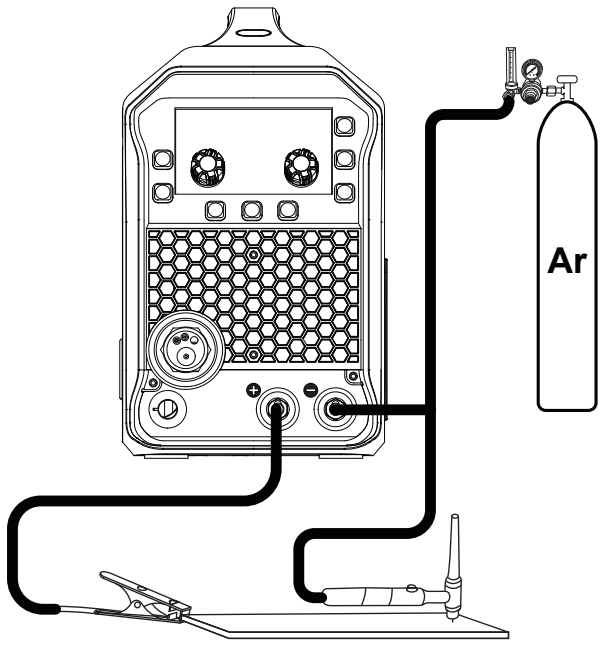

TIG Welding Parameters
The relationship between current size and tungsten needle size.

Tungsten Needle Diameter	DC Output	AC Output
1.0mm Ø	10-75A	15-55A
1.6mm Ø	40-130A	60-125A
2.0mm Ø	75-180A	85-160A
2.4mm Ø	130-230A	120-210A
3.2mm Ø	160-310A	150-250A
4.0mm Ø	275-450A	240-350A

TIG Welding Parameters
When welding with wire, the diameter of the wire is related to the current.

Welding Current	Wire Diameter
10-20A	1.0mm Ø
20-50A	1.0-1.6mm Ø
50-100A	1.0-2.4mm Ø
100-200A	1.6-3.0mm Ø
200-300A	2.4-4.5mm Ø
300-400A	3.0-6.0mm Ø
400-500A	4.5-8.0mm Ø

9.3. MIG WELDING - SOLID WIRE

9.3.1. Set up the welder as per fig.10.

9.3.2. Connect the power cable of the welding machine to a power outlet that meets the voltage requirements, ensuring proper grounding.

9.3.3. Connect the MIG torch to the MIG connector.

9.3.4. Connect the polarity conversion cable to the positive (+) output terminal.

9.3.5. Connect the ground clamp cable (fig.1.3) to the negative (-) output terminal of the welding machine. Ensure the ground clamp is securely attached to the workpiece.

9.3.6. Connect a cylinder containing shielding gas suitable for the material onto the gas nozzle (fig.2.8) located on the rear of the unit. Secure the hose connections with jubilee clips.
NOTE: This set up is known as DC Electrode Positive (straight polarity). This is commonly used for DC MIG welding.

9.3.7. When installing wire, remove contact tip from MIG torch first, after wire is sent out, put the contact tip back (see fig.5).

9.3.8. Press the Mode Selection Button (fig.7.5) until 'MIG' or 'MIG Syn' is displayed.

9.3.9. MIG Syn Mode

9.3.10. MIG Syn automatically sets suitable current and voltage based on tested welding parameters.

9.3.11. 2T/4T/Spot

9.3.12. Select 2T, 4T or Spot modes by pressing the 2T/4T/Spot Button (fig.2.2) until the required setting is displayed.

9.3.13. Adjust the Spot time using Control Dial 1 (fig.7.9).

9.3.14. Burn Back

9.3.15. Press Control Dial 2 (fig.7.10) until 'Burn Back' is displayed.

9.3.16. Adjust the value by turning Control Dial 2.

9.3.17. Voltage

9.3.18. Press Control Dial 2 until 'V' is displayed.

9.3.19. Adjust the voltage by rotating Control Dial 2.

9.3.20. Pre-Gas and Post-Gas

9.3.21. Pre-gas is the flow of shielding gas that occurs before the arc is initiated. Post-gas is the flow of shielding gas that continues after the arc is extinguished.

9.3.22. Select either Pre-Gas (fig.7.I) or Post-Gas (fig.7.J) by pressing Control Dial 2 until the required symbol is displayed.

9.3.23. Rotate the control dial to adjust.

9.3.24. Inductance

9.3.25. The hardness of welding arc can be changed by adjusting the inductance. The smaller the inductance value is, the harder the welding arc is and the bigger the splash is. The higher the inductance value, the softer the arc and the smaller the splash.

9.3.26. Press the Inductance Button (fig.7.1) and the Inductance symbol will display (fig.7.E).

9.3.27. Adjust the value by rotating Control Dial 1.

9.3.28. Wire Size

9.3.29. Press the Wire Size Selection button (fig.7.3) until the required wire diameter is displayed (0.6 / 0.8 / 0.9 / 1.0).

9.3.30. Gas/Material

9.3.31. Press the Gas/Material Selection button (fig.7.4) until the required gas/material is displayed (Steel C20 / Steel C10 / Steel C100 / Stainless Steel C2 / FC No Gas).

9.3.32. Wire Feed Speed

9.3.33. Rotate Control Dial 1 to adjust the wire feed speed.

9.3.34. Plate Thickness

9.3.35. Press Control Dial 1 until the Plate Thickness symbol is displayed (fig.7.H).

9.3.36. Rotate Control Dial 1 to adjust the required plate thickness (shown in mm).

fig.10 **MIG - Solid Wire**

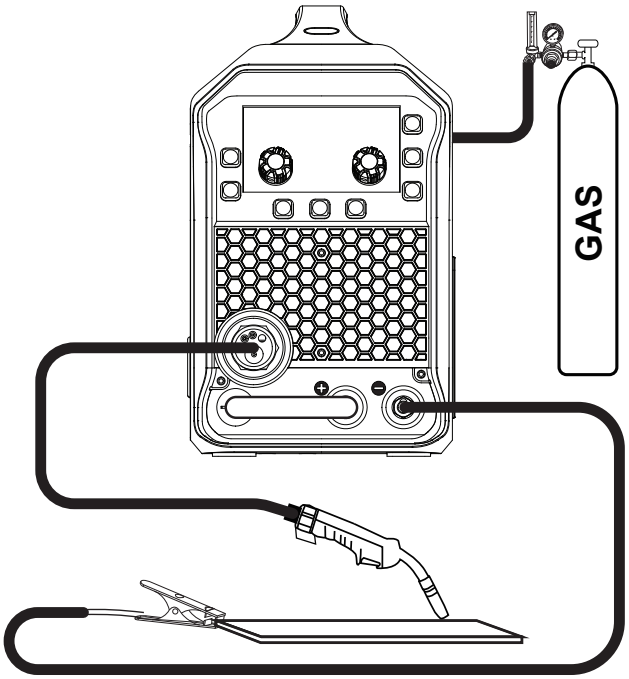

9.4. MIG WELDING - FLUX CORE WIRE

9.4.1. Set up the welder as per fig.11.

9.4.2. Connect the power cable of the welding machine to a power outlet that meets the voltage requirements, ensuring proper grounding.

9.4.3. Connect the MIG torch to the MIG connector.

9.4.4. Connect the polarity conversion cable to the negative (-) output terminal.

9.4.5. Connect the ground clamp cable (fig.1.3) to the positive (+) output terminal of the welding machine. Ensure the ground clamp is securely attached to the workpiece.
NOTE: This set up is known as DC Electrode Negative (reverse polarity). This is commonly used for DC Flux Core welding.

9.4.6. When installing wire, remove contact tip from MIG torch first, after wire is sent out, put the contact tip back (see fig.5).

9.4.7. Press the Mode Selection Button (fig.7.5) until 'MIG' or 'MIG Syn' is displayed.

9.4.8. MIG Syn Mode

9.4.9. MIG Syn automatically sets suitable current and voltage based on tested welding parameters.

9.4.10. 2T/4T/Spot

9.4.11. Select 2T, 4T or Spot modes by pressing the 2T/4T/Spot Button (fig.2.2) until the required setting is displayed.

9.4.12. Adjust the Spot time using Control Dial 1 (fig.7.9).

9.4.13. Burn Back

9.4.14. Press Control Dial 2 (fig.7.10) until 'Burn Back' is displayed.

9.4.15. Adjust the value by turning Control Dial 2.

9.4.16. Voltage

9.4.17. Press Control Dial 2 until 'V' is displayed.

9.4.18. Adjust the voltage by rotating Control Dial 2.

9.4.19. Inductance

9.4.20. The hardness of welding arc can be changed by adjusting the inductance. The smaller the inductance value is, the harder the welding arc is and the bigger the splash is. The higher the inductance value, the softer the arc and the smaller the splash.

9.4.21. Press the Inductance Button (fig.7.1) and the Inductance symbol will display (fig.7.E).

9.4.22. Adjust the value by rotating Control Dial 1.

9.4.23. Wire Size

9.4.24. Press the Wire Size Selection button (fig.7.3) until the required wire diameter is displayed (0.6 / 0.8 / 0.9 / 1.0).

9.4.25. Gas/Material

9.4.26. Press the Gas/Material Selection button (fig.7.4) until the required gas/material is displayed (Steel C20 / Steel C10 / Steel C100 / Stainless Steel C2 / FC No Gas).

9.4.27. Wire Feed Speed

9.4.28. Rotate Control Dial 1 to adjust the wire feed speed.

9.4.29. Plate Thickness

9.4.30. Press Control Dial 1 until the Plate Thickness symbol is displayed (fig.7.H).

9.4.31. Rotate Control Dial 1 to adjust the required plate thickness (shown in mm).

fig.11 **MIG - Flux Core Wire**

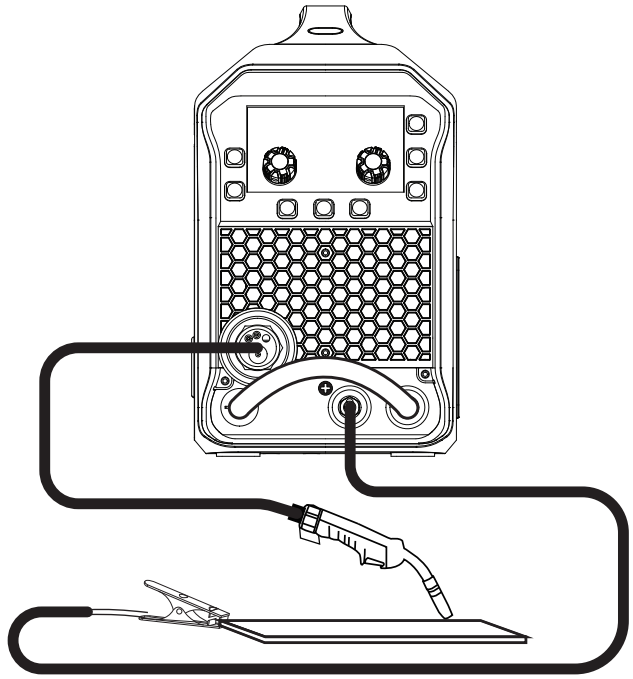

10. MAINTENANCE AND STORAGE

10.1. DAILY MAINTENANCE

- ❑ **WARNING!** Before removing the welding machine panels switch off the machine and disconnect it from the mains power supply. Wait 10-15 seconds after the unit is switched off for the capacitor to discharge.
- ❑ **WARNING!** Before carrying out routine maintenance, switch off the welding and disconnect it from the mains power supply.
- ❑ **WARNING!** If the welding machine is not functioning properly repairs should be carried out only by authorised service engineers.
- ✓ Remove welding splatter from the welding gun's tip and check the condition of the parts. Replace any damaged/worn parts immediately.
- ✓ Check that the insulation tips of the welding gun's neck are undamaged and in its place. Change any damaged parts.
- ✓ Check the tightness of the welding gun's and earthing cable's connection.
- ✓ Check the supply voltage and welding cable and replace faulty cables.
- ✓ Periodically remove the casing and, with a low pressure air flow (max. 1bar or 15psi), remove dust from inside the machine.
- × **DO NOT** direct compressed air onto the electronic circuit boards. These should be cleaned with a very soft brush.
- ✓ Ensure that all electrical connections are tight and check the wiring for damage to the insulation.
- ✓ Ensure that the casing is correctly replaced and secured before attempting to use the inverter.
- ✓ Keep the outside of the machine clean by wiping with a soft, dry cloth.
- ✓ For any other service or maintenance, contact your local Sealey service agent.
- ✓ Put the machine into the original packing in a dry, secure location, out of reach of children, if it is not to be used for a long time.
- ❑ **WARNING!** Always allow the welder to cool before storing.

10.2. MAINTENANCE OF THE EQUIPMENT

The equipment should be routinely maintained according to these instructions. All access and service covers should be closed and properly fastened when the welding equipment is in operation. The welding equipment should not be modified in any way except for those changes and adjustments covered in these instructions. In particular, the spark gaps of any arc striking and stabilising devices should be adjusted and maintained according to their instructions.

10.3. CONSUMABLES

The following parts commonly need replacement due to wear:
MIG contact tips, nozzle shrouds, tip adaptors, diffusers, liner, drive rolls, general earth clamp, torch leads, cables, electrode holder.

11. TROUBLESHOOTING

FAULT CODES	
FAULT	**DESCRIPTION**
E01/F01	Overheating
E05/F05	Torch switch/trigger closed before switching on welder.
E09/F09	The output has a short-circuit or the voltage feedback line is abnormal

COMMON ISSUES		
MODE	**PROBLEM**	**SOLUTION**
All	E01/F01 - Overheating	Wait for the welder to cool down, and then resume operation.
	E09/F09 - Short-circuit	Firmly separate the welding torch from the workpiece and shut down the welder if necessary.
	Machine cannot be turned on	1. Check the power supply cable for damage. 2. Check if the power is turned on at the socket and the machine. 3. Check the input voltage is within normal working parameters.
	Gas Leaks	Gas leaks can occur, which can lead to poor quality welds. Check the gas lines and fittings for leaks, and tighten or replace any faulty connections. It's important to regularly inspect the gas lines and fittings for wear and tear, and replace them if necessary.
	Arc instability	Check the ground connection, adjust the settings according to the type of material being welded, and replace the electrode if necessary.
	The workpiece is welded through	Reduce current.
MMA	Arcing difficulty	1. Increase the current. 2. Increase HOT START. 3. Dried electrode.
	Welding rod adhesion	1. Increase the current. 2. Increase ARC FORCE.
	Welding arc break	Shorten the distance between the electrode and the workpiece, do not pull too high.

TIG	The weld colour is dark	1. Accelerate the speed of welding. 2. Do not remove the torch immediately after welding. 3. Turn up the pre-gas and post-gas.
	The tungsten needle burns out quickly	Check wiring polarity.
	Irregular weld	Sharpen the tungsten needle.
	Weld failure	Increase current.
MIG/MAG FLUX CORE	Over splash	1. Increase inductance. 2. Check whether the power cable is securely connected. 3. Check whether the gas flow is sufficient. 4. The distance between the welding torch and the workpiece should not be too far.
	Arc instability	1. Check whether the diameter of the conductive nozzle is consistent with the welding wire. 2. Check the nozzle for metal adhesion.
	Poor welding	1. Check the gas has been turned on. 2. Check if the correct gas is being used. 3. Check whether the gas flow is sufficient.

12. RATING PLATES

The rating plate, located on the side of the welder, provides the following data:

1. The BS/EU standard relating to the safety and construction of arc welding and associated equipment.
2. Single phase transformer.
3. Symbol indicates welding with a continuous flow of welding wire.
4. Symbol for Single-phase AC supply.
5. Rating of internal protection provided by casing.
6. Output U_0 Rated minimum and maximum no load voltage.
   I_2, U_2 Current and corresponding voltage.
   X Welding ratio based on a 10 minute cycle.
   20% indicates 2 minutes welding and 8 minutes rest,
   100% would indicate continuous welding.
7. Mains Supply
   U_1 Rated supply voltage and frequency.
   I_{1max} Maximum current.
   I_{1eff} Maximum effective current.
8. Welding current range.

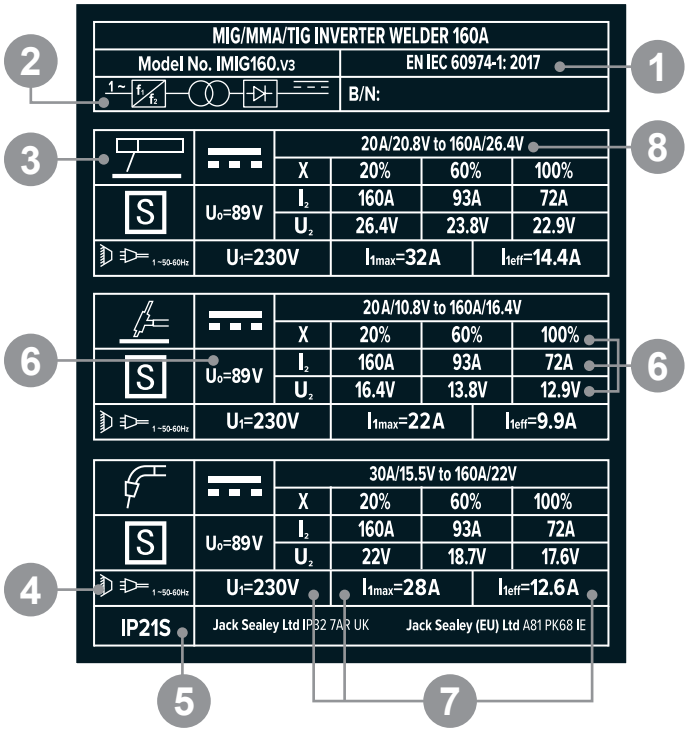

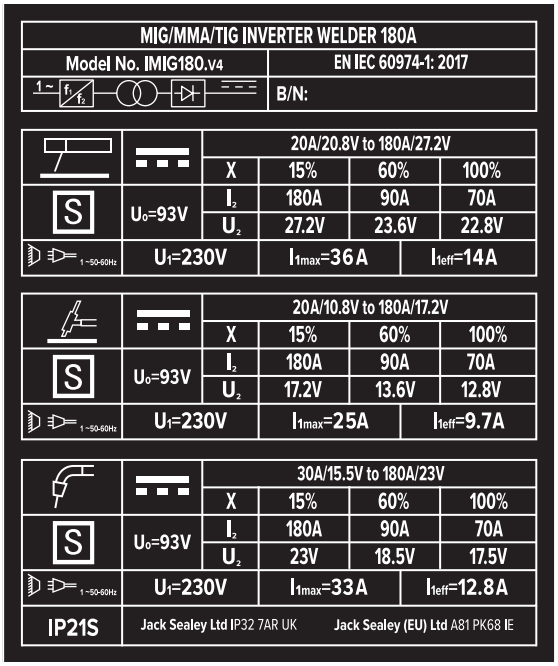

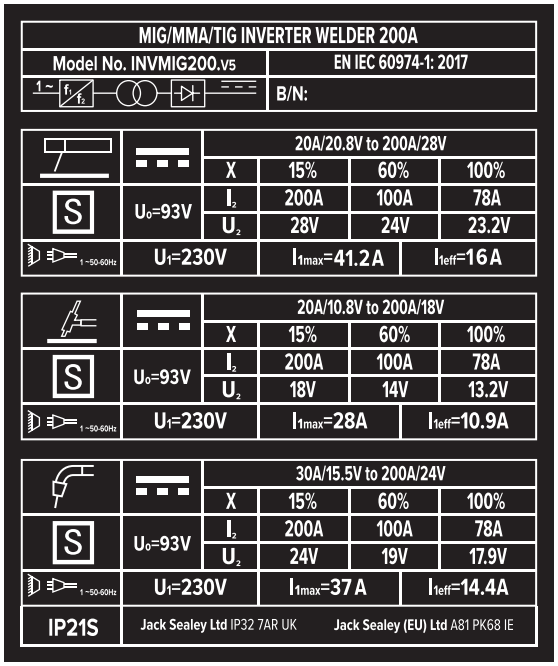

13. END OF LIFE

At the end of its service life, this product must be disposed of in an environmentally responsible manner. Any liquids or gases and other hazardous materials should be drained and handled by an approved waste management facility. Components such as metal parts should be recycled wherever possible. **DO NOT** discard the appliance or fluids with general household or construction waste. Please follow all local environmental regulations to ensure safe and sustainable disposal.

ENVIRONMENT PROTECTION
Recycle unwanted materials instead of disposing of them as waste. All tools, accessories and packaging should be sorted, taken to a recycling centre and disposed of in a manner which is compatible with the environment. When the product becomes completely unserviceable and requires disposal, drain any fluids (if applicable) into approved containers and dispose of the product and fluids according to local regulations.

REGISTER YOUR PURCHASE HERE

WEEE REGULATIONS
Dispose of this product at the end of its working life in compliance with the EU Directive on Waste Electrical and Electronic Equipment (WEEE). When the product is no longer required, it must be disposed of in an environmentally protective way. Contact your local solid waste authority for recycling information.

Note: It is our policy to continually improve products and as such we reserve the right to alter data, specifications and component parts without prior notice. Please note that other versions of this product are available. If you require documentation for alternative versions, please email or call our technical team on technical@sealey.co.uk or 01284 757505.
Important: No Liability is accepted for incorrect use of this product.
Warranty: Guarantee is 36 months from purchase date, proof of which is required for any claim.

Jack Sealey Ltd t/a Sealey Group Kempson Way, Suffolk Business Park, Bury St Edmunds, Suffolk, IP32 7AR UK
Jack Sealey (EU) Ltd t/a Sealey Group Farney Street, Carrickmacross, Co. Monaghan, A81 PK68 Ireland
Tel: 01284 757500 ▪ **Email:** sales@sealey.co.uk ▪ **Web:** www.sealey.co.uk

© Jack Sealey Limited